INSTRUCTION MANUAL

PRODUCT NR. BW-20009-03

HEAVY DUTY 20L CAN HOLDER

1

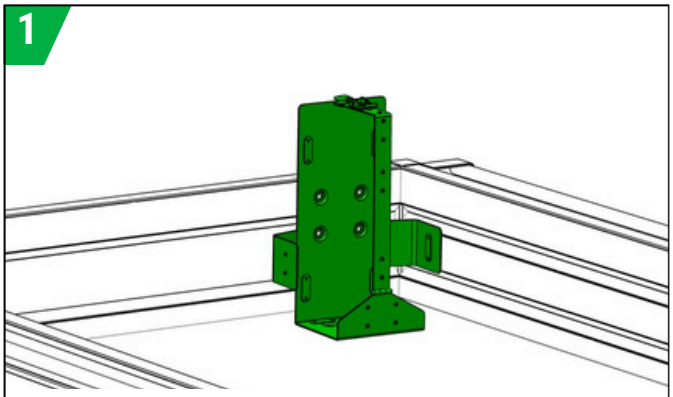

Select a safe position for the cans holder where it will be attached. When installing on a vehicle, please observe the legal requirements for add-on parts. If in doubt, contact the relevant authority for clarification

2

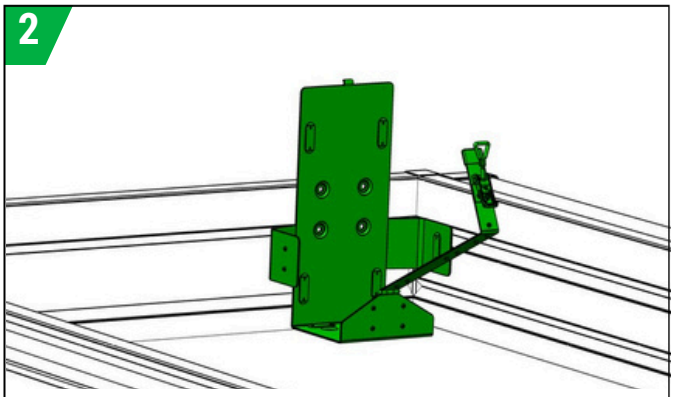

Make sure that crossbar is fully open at the selected location to put in and remove the fuel can

3

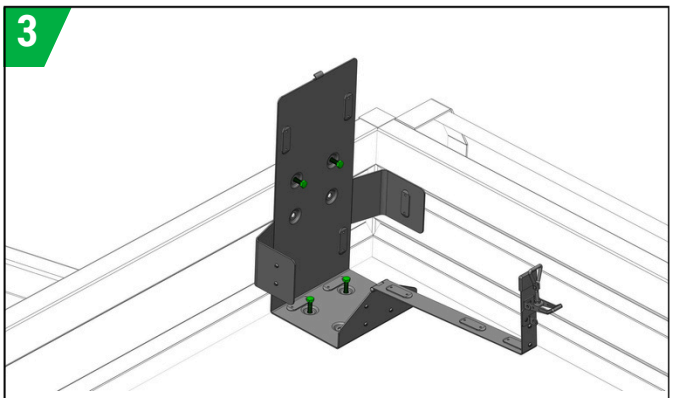

Select the right type of screw (Ø 8-6 mm) depending on the base material. Attach the holder to the base with two screws and at least two to the side (the screws are not included). If it is not possible to attach to opposite side, four screws should be used to the side where this is possible

4

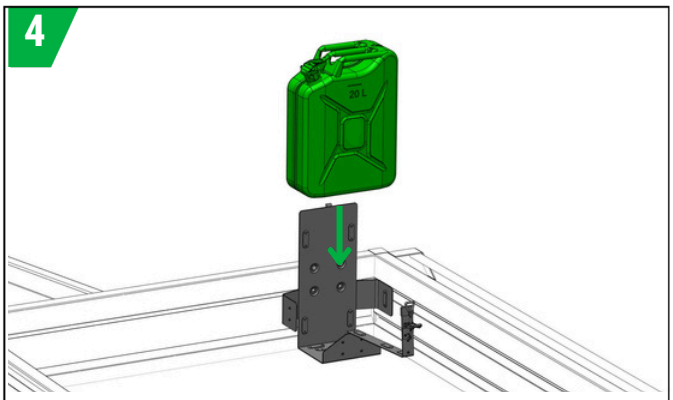

Place a 20L fuel can in the open can holder

5

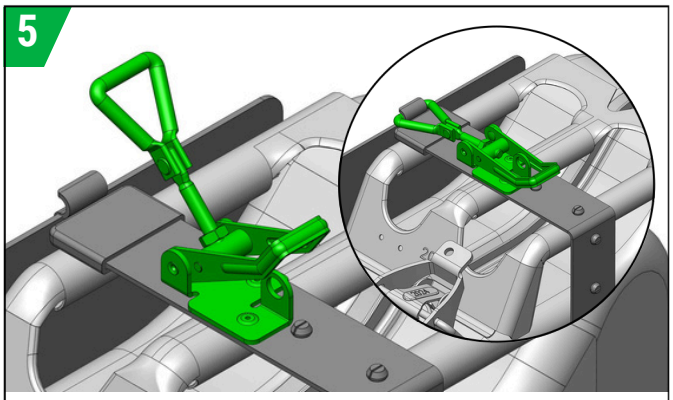

Hook the connection latch and then press the lever. If the lever cannot be locked or left free movement after pressing, adjust the length of the mechanism loop by screwing or unscrewing it from the hinge. It is not recommended to leave the holder under precipitation for a prolonged period

6

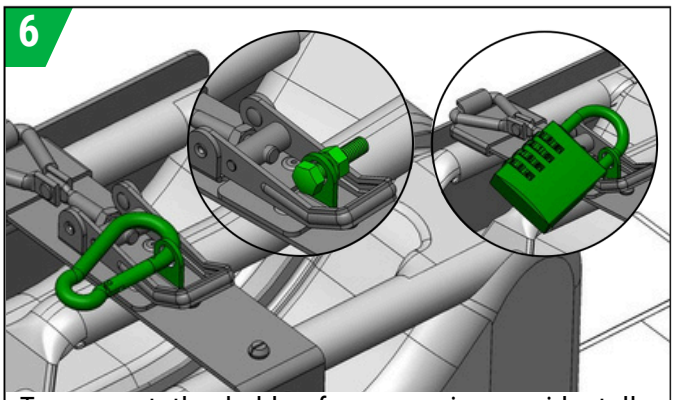

To prevent the holder from opening accidentally, for additional safety, hook a carabiner into the clamp loop, screw in the M6 screw with a nut, or lock it with a padlock (not included in the kit)