INSTRUCTION MANUAL

PRODUCT NR. BW-20009-02

10L CAN HOLDER

1

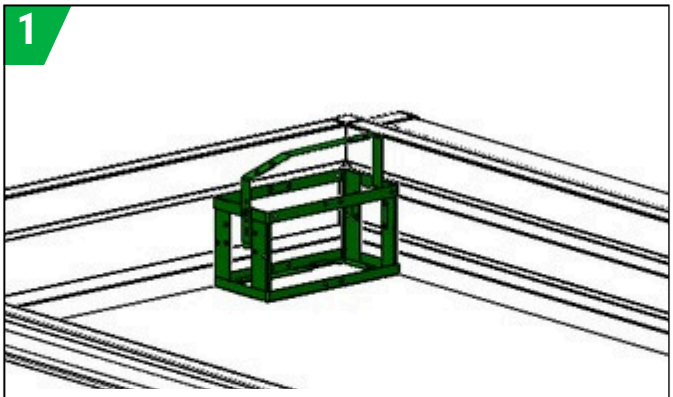

Select a safe position for the cans holder where it will be attached. When installing on a vehicle, please observe the legal requirements for add-on parts. If in doubt, contact the relevant authority for clarification

2

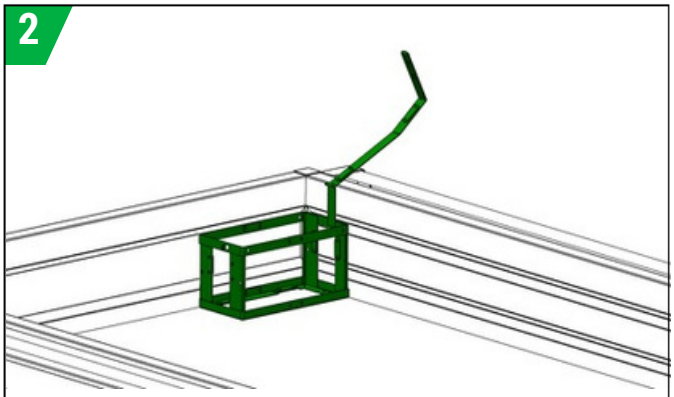

Make sure that crossbar is fully open to put in and remove the fuel can

3

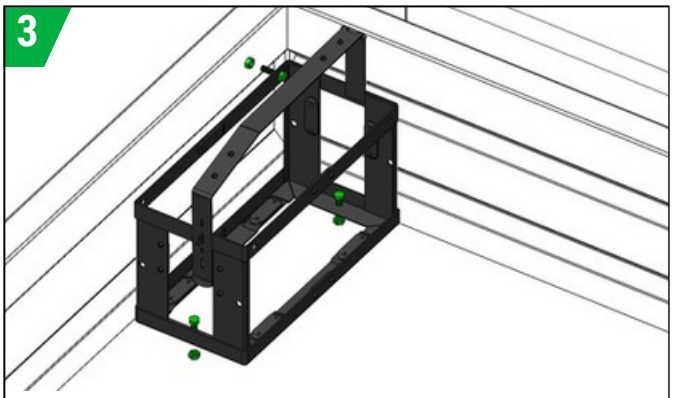

Select the right type of screw (Ø 8-6 mm) depending on the base material. Attach the holder to the base with two screws and at least one to the side (screws not included). Attaching a holder only from the side is not allowed

4

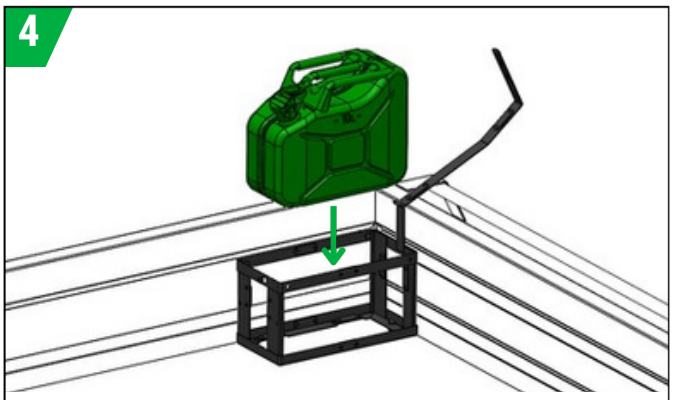

Place a 10L fuel can in the open can holder

5

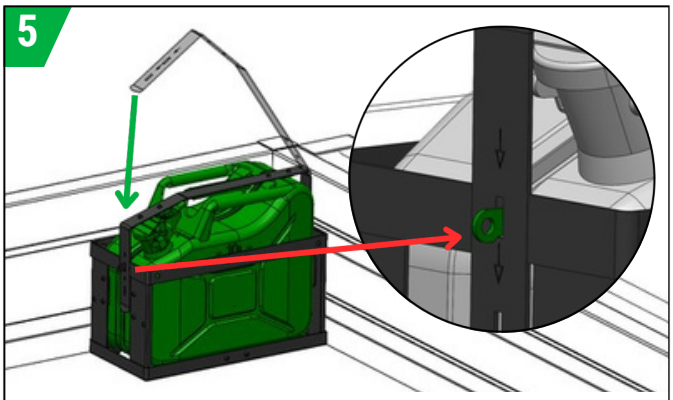

Hook the latch over the clamp loop and ensure it is fully secured. It is not recommended to leave the holder under precipitation for a prolonged period

6

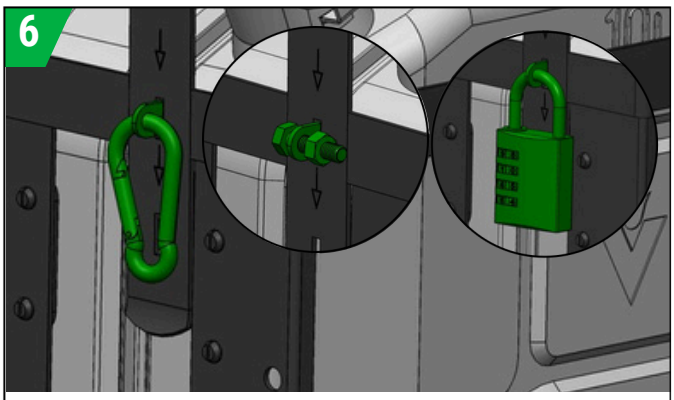

To prevent the holder from opening accidentally, for additional safety, hook a carabiner into the clamp loop, screw in an M6 bolt with a nut, or lock it with a padlock (not included)